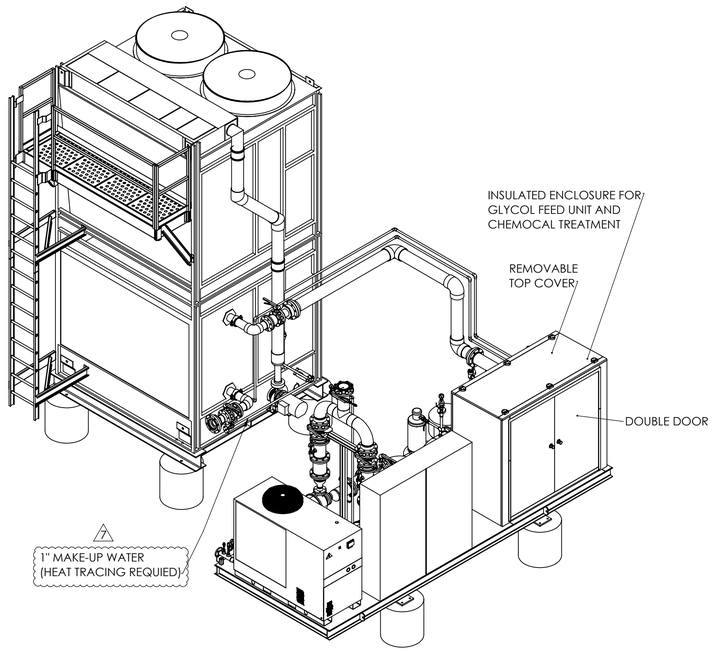

ISOMETRIC VIEW

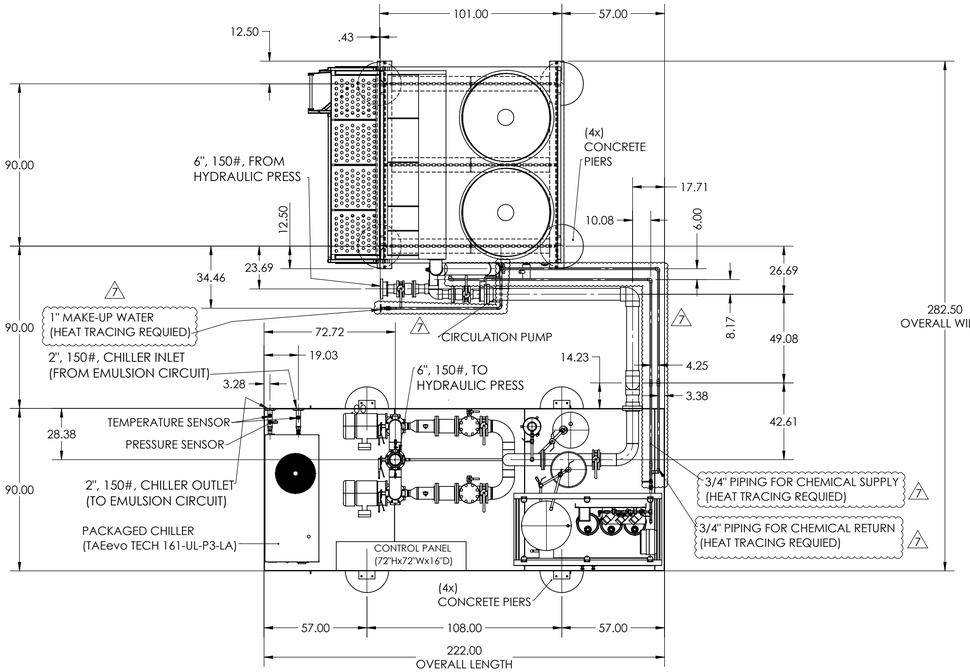

PLAN

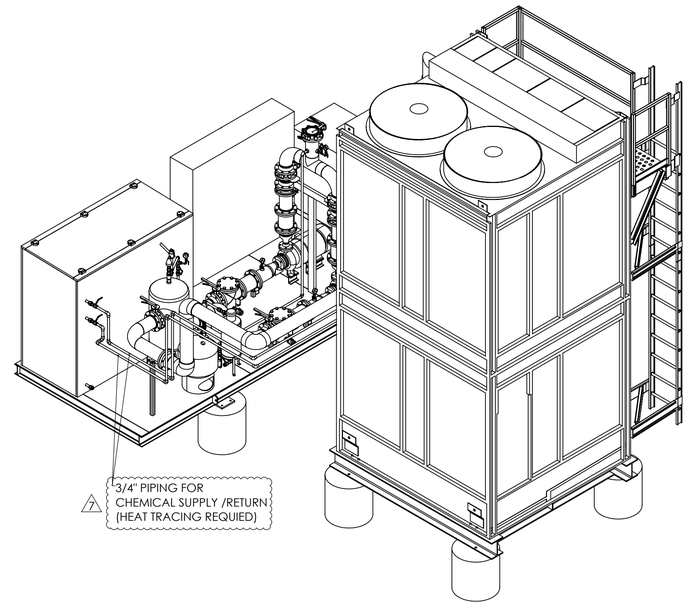

ISOMETRIC VIEW

MARLEY MH FLUID COOLER,
MODEL: MHF7103-E
(CLOSED CIRCUIT EVAPORATIVE COOLER)

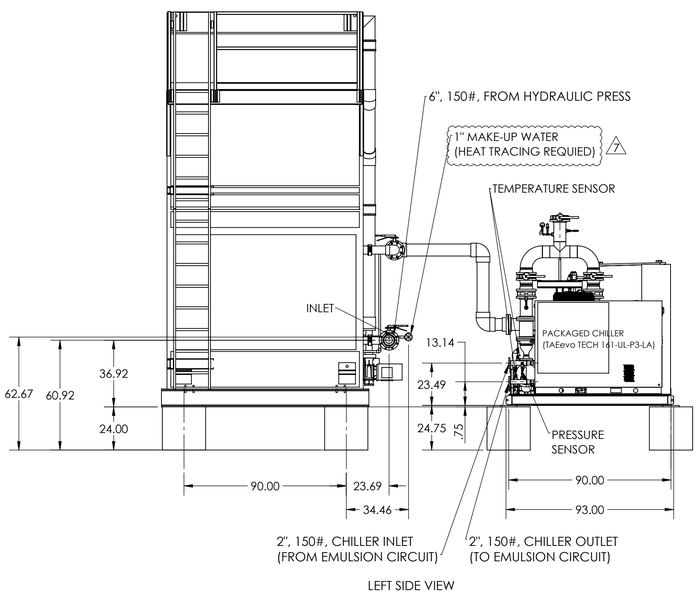

LEFT SIDE VIEW

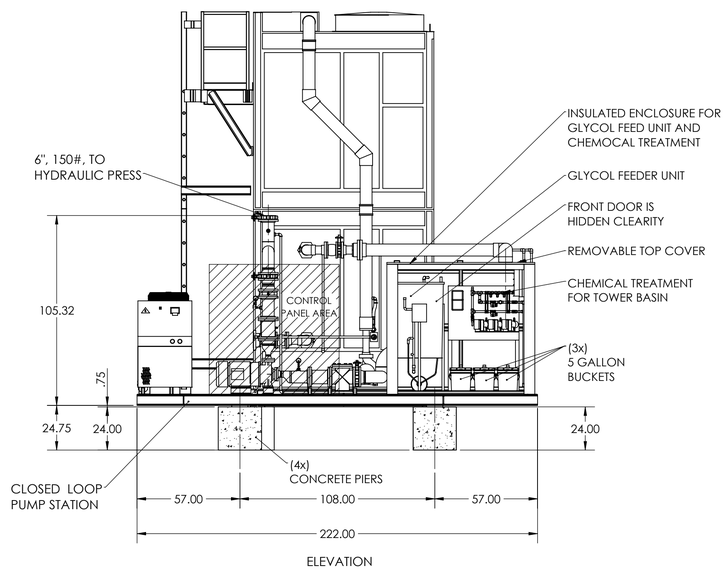

ELEVATION

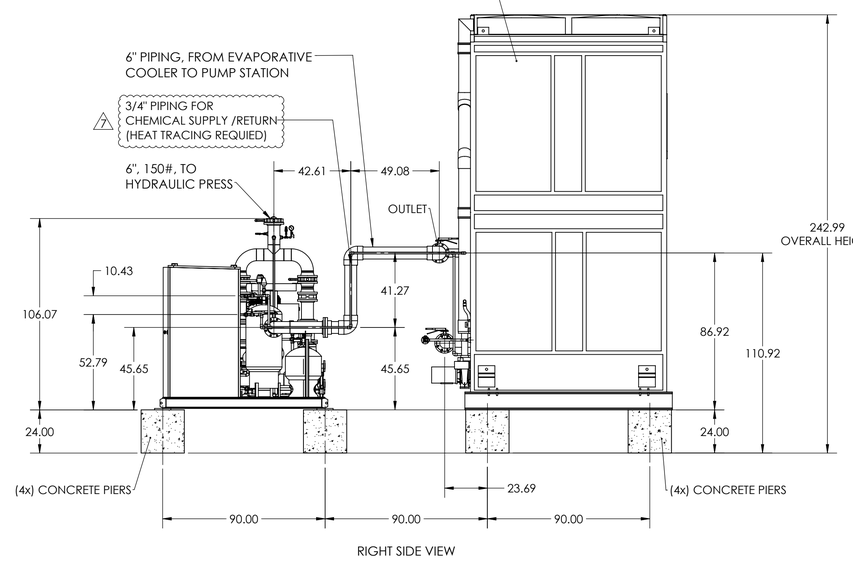

RIGHT SIDE VIEW

CLOSED LOOP PUMP STATION AND COOLING TOWER WITH STAND LAYOUT

PAINT SPEC:	TBD
SYSTEM VOLTAGE:(VAC / ∅ /Hz)	230/460/3/60
PROCESS OPERATING FLOW: (gpm)	407
PROCESS OPERATING PRESSURE: (psi)	54
TOWER OPERATING FLOW: (gpm)	407
TOWER OPERATING PRESSURE: (psi)	54
SYSTEM TEST PRESSURE: (psi)	-

REV	DATE	DESIGN	ENG CHK	DESCRIPTION
7	10/25/24	VT	BA	HEAT TRACING NOTE IS ADDED
6	09/20/24	VT	BA	CHEMICAL TREATMENT SUPPLY AND RETURN SPOOL ARE UPDATED AND SENSOR ADDED
5	09/13/24	VT	BA	MAKE-UP WATER SPOOL OF CLOSEED CIRCUIT EVAPORATIVE COOLER IS UPDATED TO 1" FROM 2".
4	07/17/24	VT	BA	MAKE-UP WATER SPOOL IS ADDED TO CLOSEED CIRCUIT EVAPORATIVE COOLER
3	06/27/24	VT	BA	CUSTOMER COMMENTS ARE INCORPORATED
2	06/19/24	VT	BA	CUSTOMER COMMENTS ARE INCORPORATED
1	06/17/24	VT	BA	CUSTOMER COMMENTS ARE INCORPORATED
0	06/10/24	VT	BA	INITIAL REVIEW

This drawing and data is the property of Fluid Cooling Systems, LLC. The information contained herein is confidential and proprietary information of Fluid Cooling Systems and is not transferable. This print is furnished with the clear understanding that it is to be used only for repair and maintenance of equipment furnished by Fluid Cooling System, LLC and to assist in obtaining spare parts. It shall not be loaned, copied, or otherwise used in manufacture without the express written permission of Fluid Cooling Systems, LLC.

FLUID COOLING SYSTEMS, LLC.
2441 E. Bristol Rd
Burton, MI. 48529
o: 248.430.6271
www.fluidcoolingsystems.com

DRAWING TITLE: **CLOSED LOOP PUMP STATION AND CLOSED CIRCUIT EVAPORATIVE COOLER LAYOUT**

EQUIPMENT: **SEE PROCESS DIAGRAM (P&ID)**

SHEET NO.: 1 OF 4

REV.: 7

CUSTOMER:

DRAWING NO.: **230134_ORTHO1**

SCALE: NOT TO SCALE

SIZE: D

230134 SCHILLER FOOD PRESS REV 7

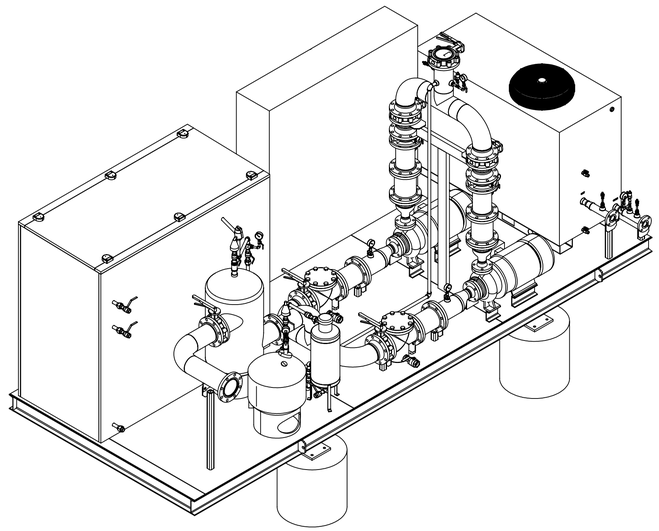

ISOMETRIC VIEW

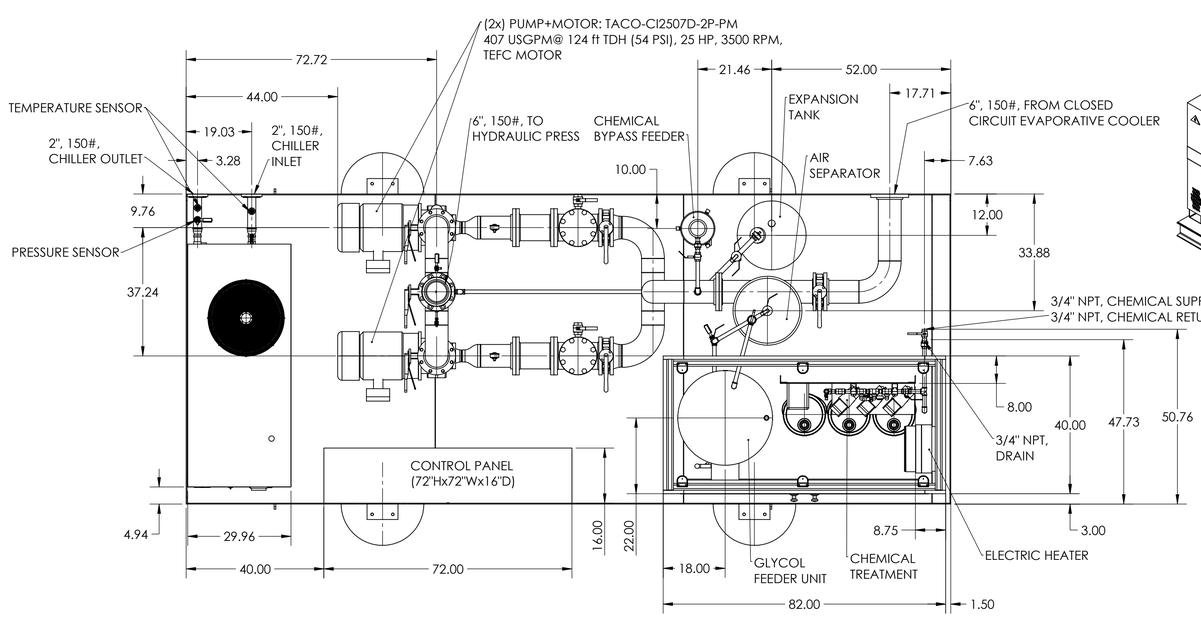

PLAN

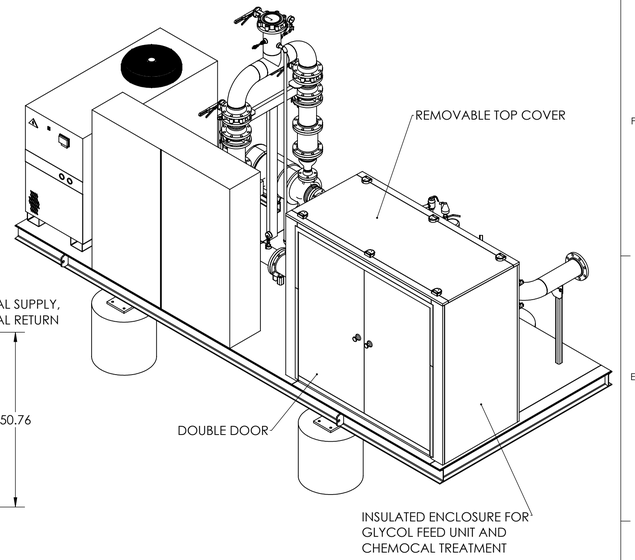

ISOMETRIC VIEW

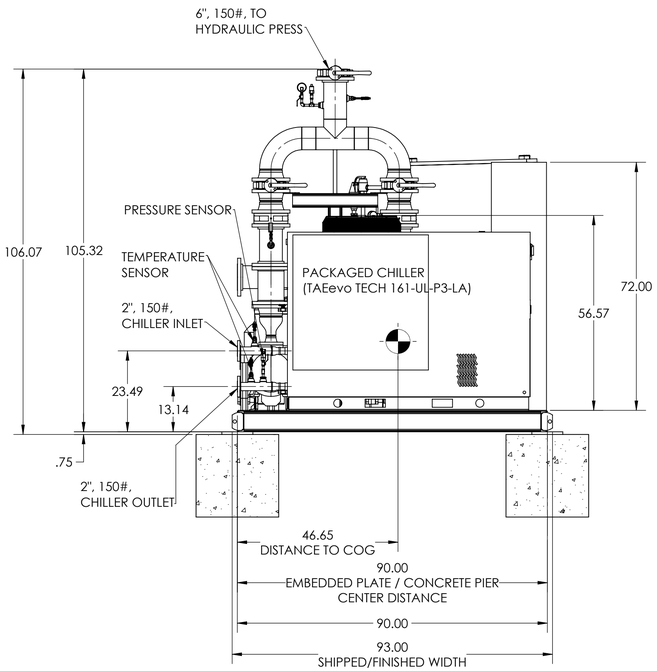

LEFT SIDE VIEW

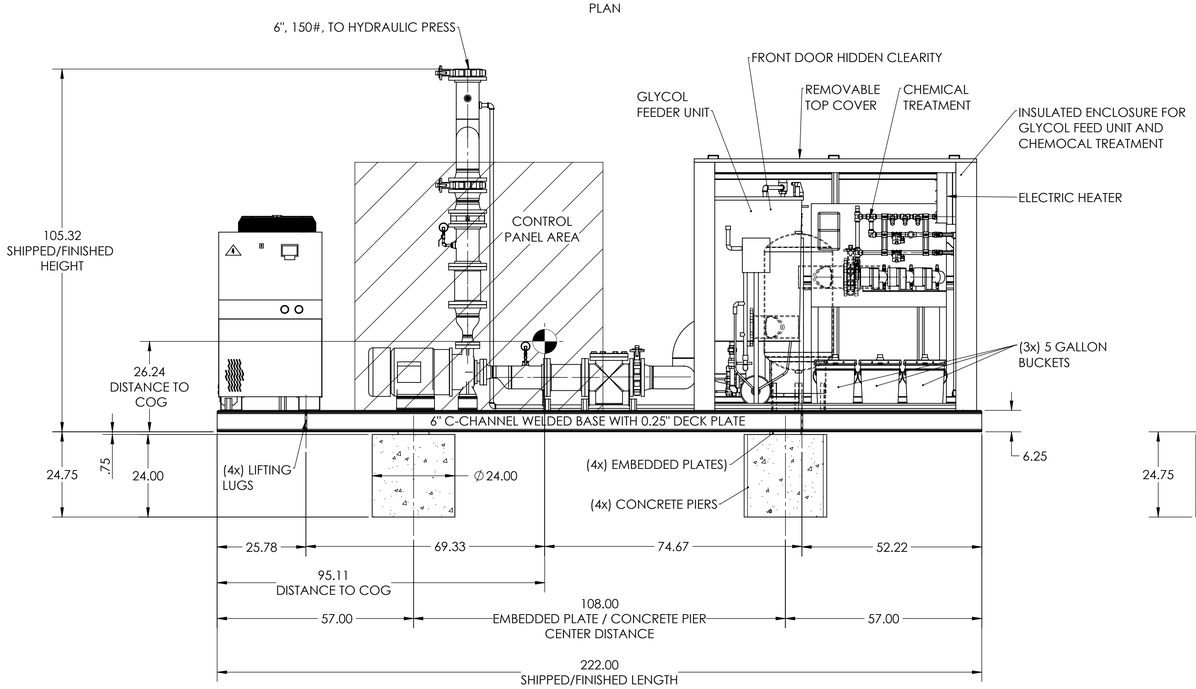

ELEVATION

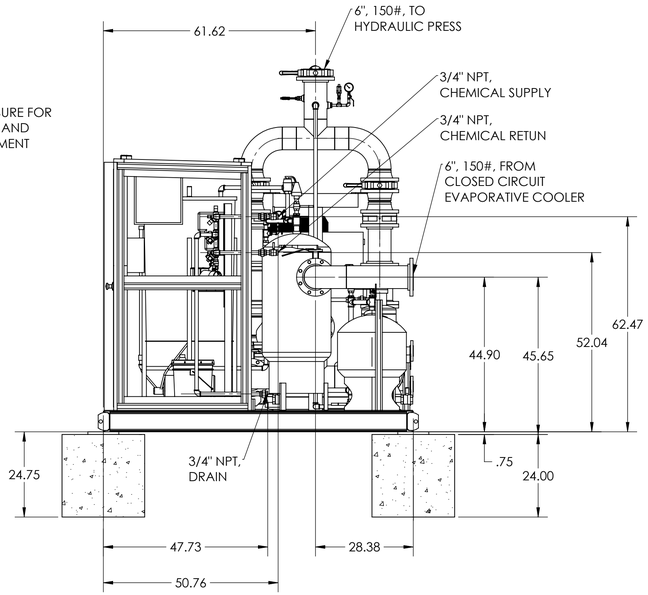

RIGHT SIDE VIEW

PAINT SPEC:	TBD
SYSTEM VOLTAGE:(VAC / ∅ /Hz)	230/460/3/60
PROCESS OPERATING FLOW: (gpm)	407
PROCESS OPERATING PRESSURE: (psi)	54
TOWER OPERATING FLOW: (gpm)	407
TOWER OPERATING PRESSURE: (psi)	54
SYSTEM TEST PRESSURE: (psi)	-

REV	DATE	DESIGN	ENG CHK	DESCRIPTION
7	10/25/24	VT	BA	HEAT TRACING NOTE IS ADDED
6	09/20/24	VT	BA	CHEMICAL TREATMENT SUPPLY AND RETURN SPOOL ARE UPDATED AND SENSOR ADDED
5	09/13/24	VT	BA	MAKE–UP WATER SPOOL OF CLOSEED CIRCUIT EVAPORATIVE COOLER IS UPDATED TO 1" FROM 2".
4	07/17/24	VT	BA	MAKE–UP WATER SPOOL IS ADDED TO CLOSEED CIRCUIT EVAPORATIVE COOLER
3	06/27/24	VT	BA	CUSTOMER COMMENTS ARE INCORPORATED
2	06/19/24	VT	BA	CUSTOMER COMMENTS ARE INCORPORATED
1	06/17/24	VT	BA	CUSTOMER COMMENTS ARE INCORPORATED
0	06/10/24	VT	BA	INITIAL REVIEW

CLOSED LOOP PUMP STATION LAYOUT

NOTES:
1. APPROXIMATE WEIGHT = 9464.15 LBS (DRY)
2. STRUCTURAL STEEL FINISH = PAINTED

This drawing and data is the property of Fluid Cooling Systems, LLC. The information contained herein is confidential and proprietary information of Fluid Cooling Systems and is not transferable. This print is furnished with the clear understanding that it is to be used only for repair and maintenance of equipment furnished by Fluid Cooling System, LLC and to assist in obtaining spare parts. It shall not be loaned, copied, or otherwise used in manufacture without the express written permission of Fluid Cooling Systems, LLC.

FLUID COOLING SYSTEMS, LLC.
2441 E. Bristol Rd
Burton, MI. 48529
o: 248.430.6271
www.fluidcoolingsystems.com

DRAWING TITLE: **CLOSED LOOP PUMP STATION LAYOUT**

EQUIPMENT: **SEE PROCESS DIAGRAM (P&ID)**

SHEET NO. 2 OF 4 | REV. 7

CUSTOMER

DRAWING NO. **230134_ORTHO2**

DWG NO. D 230134 SCHILLER HIGH PRESS REV 7

PUMP SKID LOADS (lbs) (WIND X-DIRECTION)			
CONCRETE PIER	X-DIRECTION	Y-DIRECTION	Z-DIRECTION
A	296.35	1859.40	2391
B	-1832.30	2609.20	2712
C	-1723.60	3023.30	-3167.80
D	1376.80	2245.10	-1935.20

PUMP SKID LOADS (lbs) (WIND Z-DIRECTION)			
CONCRETE PIER	X-DIRECTION	Y-DIRECTION	Z-DIRECTION
A	979.55	907.38	856.58
B	-1933.70	2208.80	1533.90
C	-693.41	3994.80	-3558.40
D	1647.60	2626.10	-2217.20

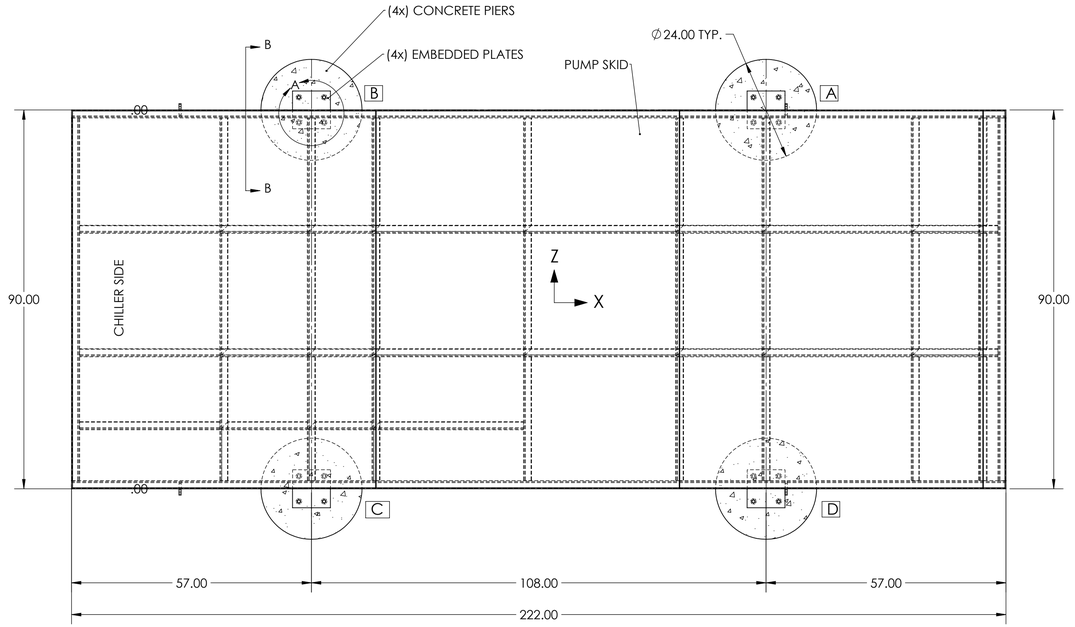

PLAN

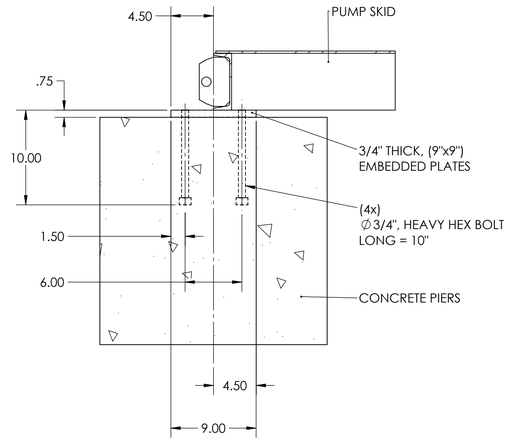

SECTION B-B
SCALE 1 : 8

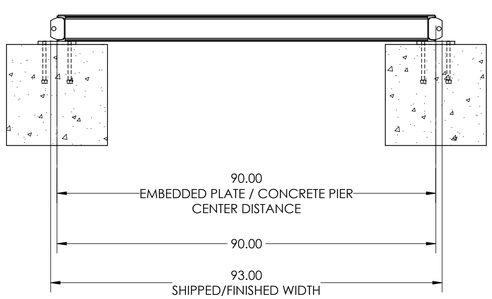

LEFT SIDE VIEW

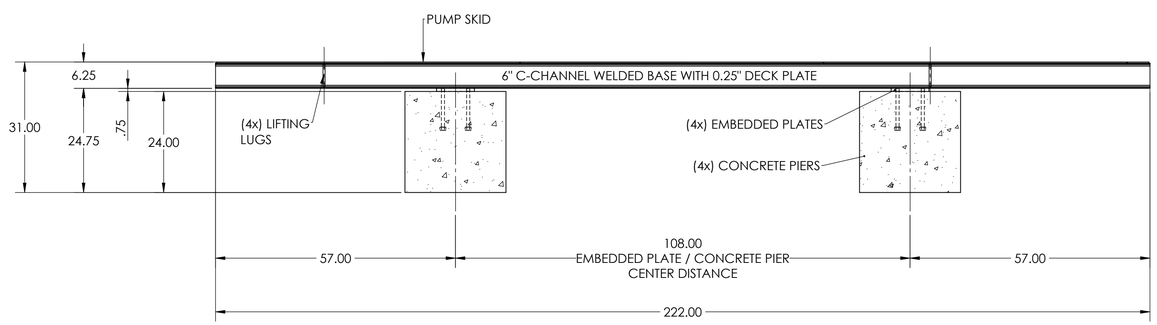

ELEVATION

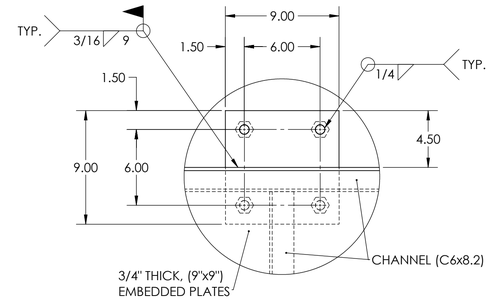

DETAIL A
SCALE 1 : 6
EMBEDDED PLATE

CLOSED LOOP PUMP STATION - FOUNDATION LAYOUT AND LOADS

PAINT SPEC:	TBD
SYSTEM VOLTAGE:(VAC / Ø /Hz)	230/460/3/60
PROCESS OPERATING FLOW: (gpm)	407
PROCESS OPERATING PRESSURE: (psi)	54
TOWER OPERATING FLOW: (gpm)	407
TOWER OPERATING PRESSURE: (psi)	54
SYSTEM TEST PRESSURE: (psi)	-

REV	DATE	DESIGN	ENG CHK	DESCRIPTION
7	10/25/24	VT	BA	HEAT TRACING NOTE IS ADDED
6	09/20/24	VT	BA	CHEMICAL TREATMENT SUPPLY AND RETURN SPOOL ARE UPDATED
5	09/13/24	VT	BA	MAKE-UP WATER SPOOL OF CLOSEED CIRCUIT EVAPORATIVE COOLER IS UPDATED TO 1" FROM 2".
4	07/17/24	VT	BA	MAKE-UP WATER SPOOL IS ADDED TO CLOSEED CIRCUIT EVAPORATIVE COOLER
3	06/27/24	VT	BA	CUSTOMER COMMENTS ARE INCORPORATED
2	06/19/24	VT	BA	CUSTOMER COMMENTS ARE INCORPORATED
1	06/17/24	VT	BA	CUSTOMER COMMENTS ARE INCORPORATED
0	06/10/24	VT	BA	INITIAL REVIEW

This drawing and data is the property of Fluid Cooling Systems, LLC. The information contained herein is confidential and proprietary information of Fluid Cooling Systems and is not transferable. This print is furnished with the clear understanding that it is to be used only for repair and maintenance of equipment furnished by Fluid Cooling System, LLC and to assist in obtaining spare parts. It shall not be loaned, copied, or otherwise used in manufacture without the express written permission of Fluid Cooling Systems, LLC.

FLUID COOLING SYSTEMS, LLC.
2441 E. Bristol Rd
Burton, MI. 48529
o: 248.430.6271
www.fluidcoolingsystems.com

DRAWING TITLE: **CLOSED LOOP PUMP STATION - FOUNDATION LAYOUT AND LOADS**

EQUIPMENT: **SEE PROCESS DIAGRAM (P&ID)**

SHEET NO. 3 OF 4 | REV. 7

CUSTOMER

DRAWING NO. 230134_ORTHO2

SIZE D | 230134 - SCHULER NEW PRESS | REV 7

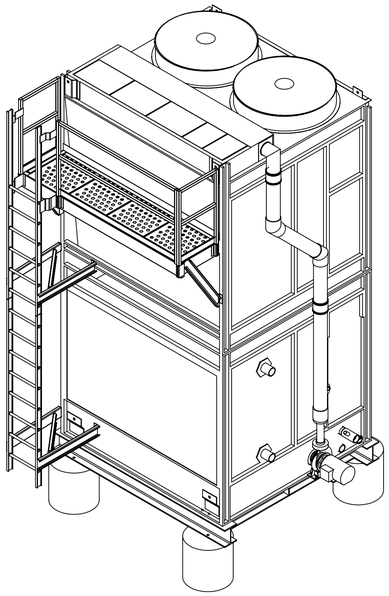

ISOMETRIC VIEW

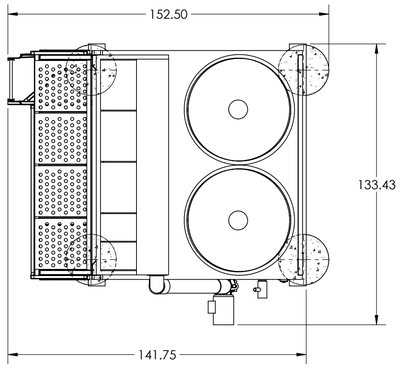

TOP VIEW

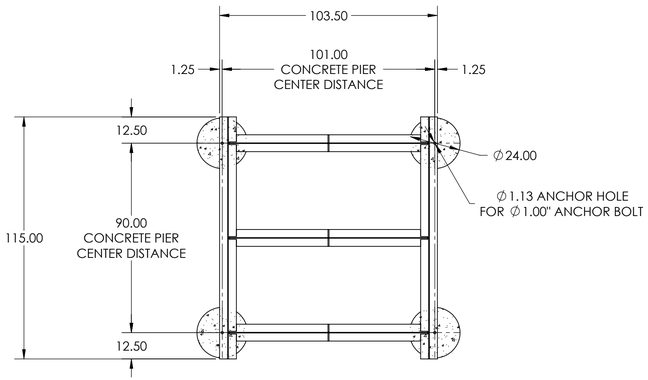

SECTION E-E
FOUNDATION PLAN

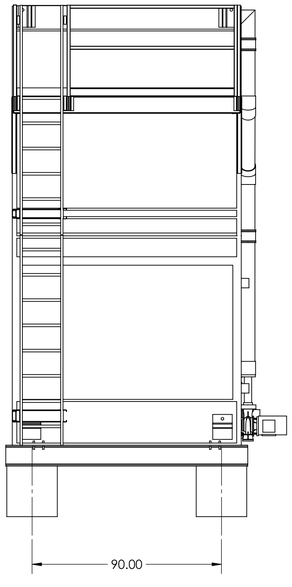

LEFT SIDE VIEW

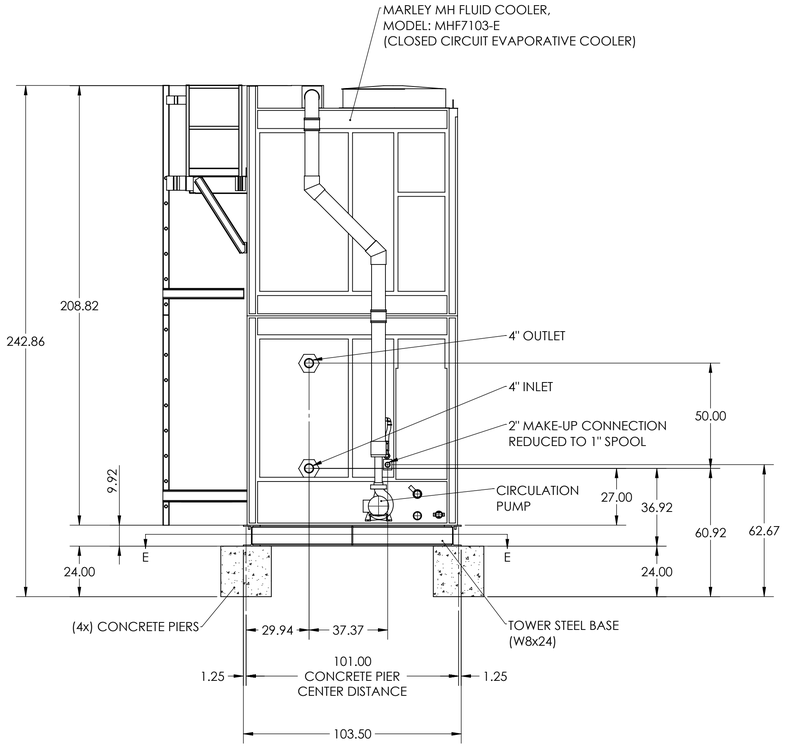

FRONT VIEW

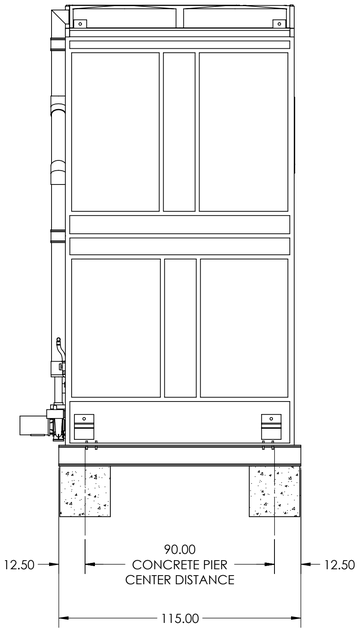

RIGHT SIDE VIEW

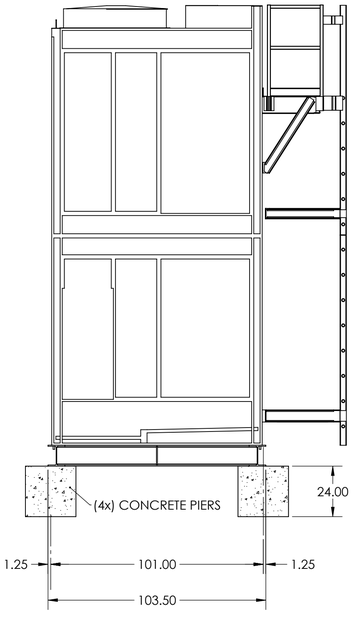

BACK SIDE VIEW

PAINT SPEC:	TBD
SYSTEM VOLTAGE:(VAC / Ø /Hz)	230/460/3/60
PROCESS OPERATING FLOW: (gpm)	407
PROCESS OPERATING PRESSURE: (psi)	54
TOWER OPERATING FLOW: (gpm)	407
TOWER OPERATING PRESSURE: (psi)	54
SYSTEM TEST PRESSURE: (psi)	-

REV	DATE	DESIGN	ENG CHK	DESCRIPTION
7	10/25/24	VT	BA	HEAT TRACING NOTE IS ADDED
6	09/20/24	VT	BA	CHEMICAL TREATMENT SUPPLY AND RETURN SPOOL ARE UPDATED
5	09/13/24	VT	BA	MAKE-UP WATER SPOOL OF CLOSEED CIRCUIT EVAPORATIVE COOLER IS UPDATED TO 1" FROM 2".
4	07/17/24	VT	BA	MAKE-UP WATER SPOOL IS ADDED TO CLOSEED CIRCUIT EVAPORATIVE COOLER
3	06/27/24	VT	BA	CUSTOMER COMMENTS ARE INCORPORATED
2	06/19/24	VT	BA	CUSTOMER COMMENTS ARE INCORPORATED
1	06/17/24	VT	BA	CUSTOMER COMMENTS ARE INCORPORATED
0	06/10/24	VT	BA	INITIAL REVIEW

CLOSED CIRCUIT EVAPORATIVE COOLER LAYOUT [MARLEY MH FLUID COOLER, MODEL: MHF7103-E]

This drawing and data is the property of Fluid Cooling Systems, LLC. The information contained herein is confidential and proprietary information of Fluid Cooling Systems and is not transferable. This print is furnished with the clear understanding that it is to be used only for repair and maintenance of equipment furnished by Fluid Cooling System, LLC and to assist in obtaining spare parts. It shall not be loaned, copied, or otherwise used in manufacture without the express written permission of Fluid Cooling Systems, LLC.

FLUID COOLING SYSTEMS, LLC.
2441 E. Bristol Rd
Burton, MI. 48529
o: 248.430.6271
www.fluidcoolingsystems.com

DRAWING TITLE	CLOSED CIRCUIT EVAPORATIVE COOLER LAYOUT [MARLEY MH FLUID COOLER, MODEL: MHF7103-E]		
EQUIPMENT	SEE PROCESS DIAGRAM (P&ID)	SHEET NO. 4 OF 4	REV. 7
CUSTOMER		DRAWING NO. 230134_ORTHO3	

SIZE D 230134-SCHULER NEW PRESS REV 7